Expected Responses

The candidates should have stated that for arrangements 1, 2, 3 and 4 the feeler gauge should be positioned at C, B, C and A respectively.

Question 8(a)

State **two** methods of repairing a tyre tube. (1 mark)

The syllabus required candidates not only to know the methods of repairing a tyre but also repair effectively punctures on tyre tubes using different methods. In their answer, the candidates were expected to give cold chemical cure patching and hot vulcanizing patching as the most commonly used methods to repair tyre tubes.

Question 11

Figure 4 shows an isometric drawing of a bracket. Draw full size in first angle projection the following views:

(a) Front elevation in the direction of arrow A.
(b) A sectioned-end elevation along the cutting plane X-X. (15 marks)

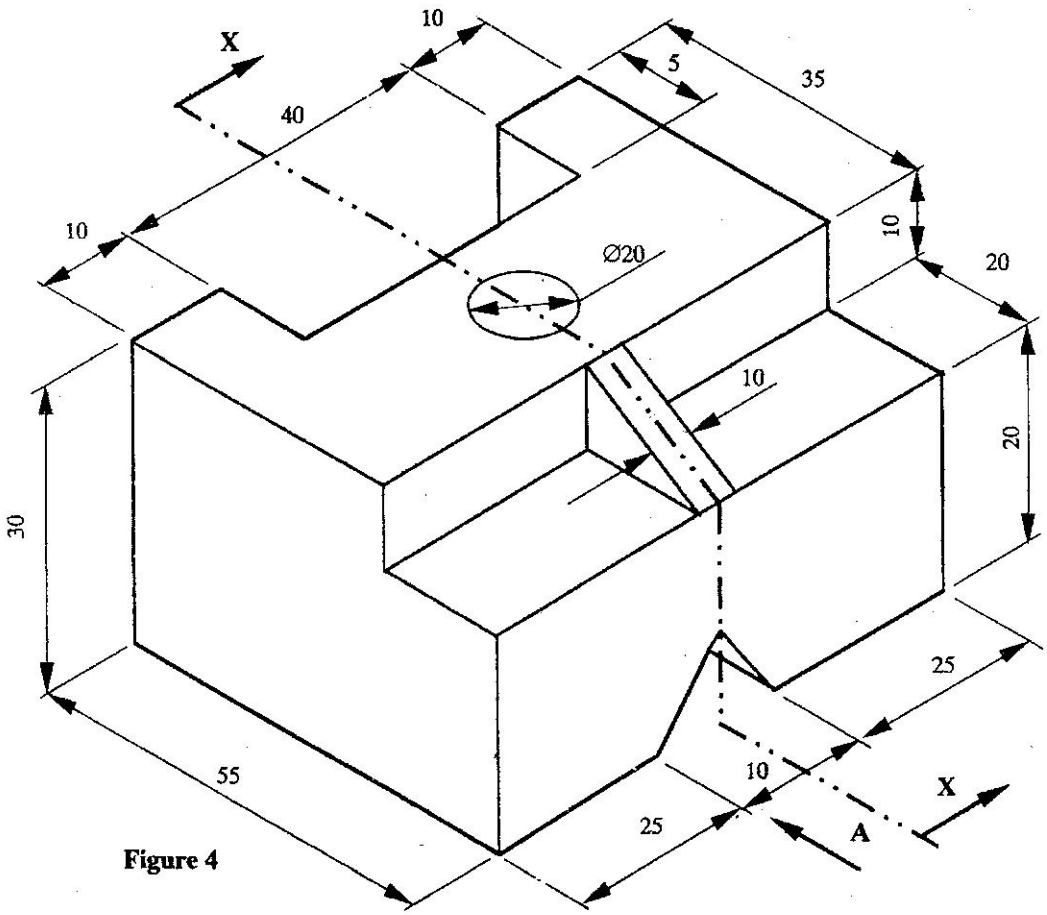

Figure 4